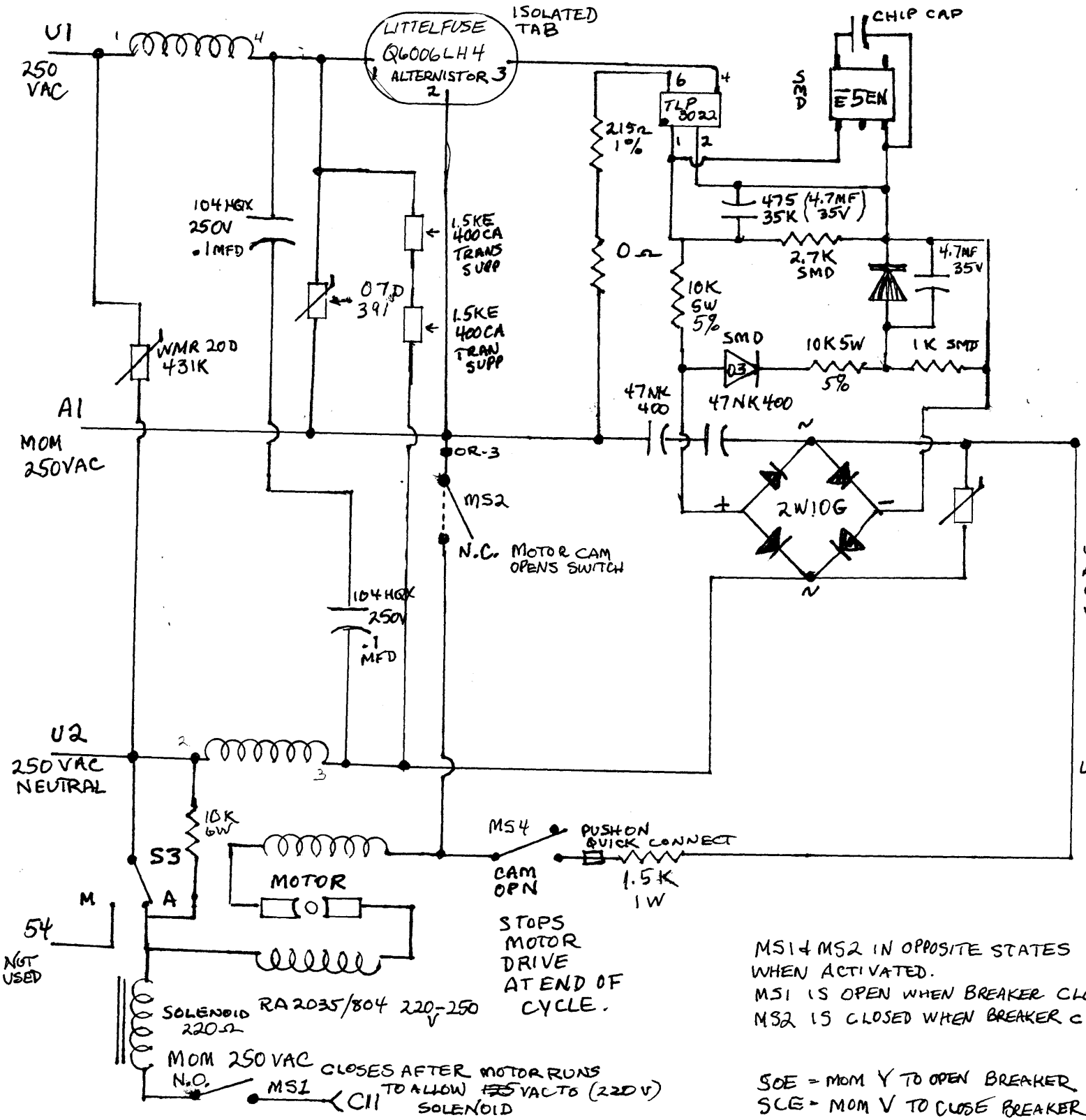

ABB SACE REOB52001-03

MOTOR DRIVE MODEL

KT5M2

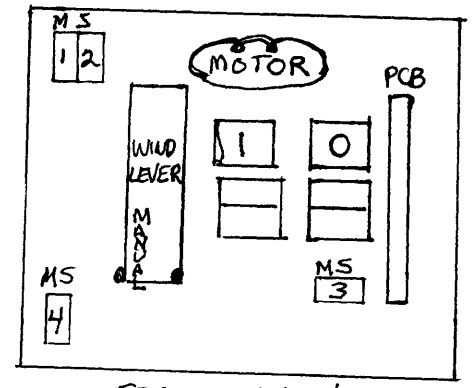

FRONT VIEW
COVER REMOVED

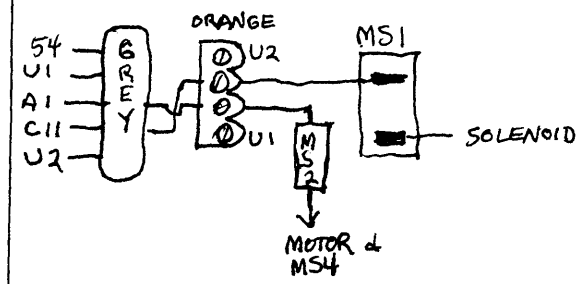

LEGENDS

U1 - U2 220 - 250VAC ALWAYS HOT TO LOGIC BOARD

A17 = PC BOARD

A1 = VOLTAGE FOR MOTOR, MOMENTARY 240 VAC

C11 - VOLTAGE FOR SOLENOID, MOMENTARY 240 VAC

A2 = MOTOR BOX

54 = TALLY IN MANUAL OPN

MS1 & MS2 IN OPPOSITE STATES WHEN ACTIVATED.

MS1 IS OPEN WHEN BREAKER CLOSED

MS2 IS CLOSED WHEN BREAKER CLOSED OR TRIPPED

~ = NEUTRAL LOWSIDE

~+ AC LINE HOT

YC = SOLENOID

SOE = MOM Y TO OPEN BREAKER

SCE = MOM V TO CLOSE BREAKER

REV 7 13