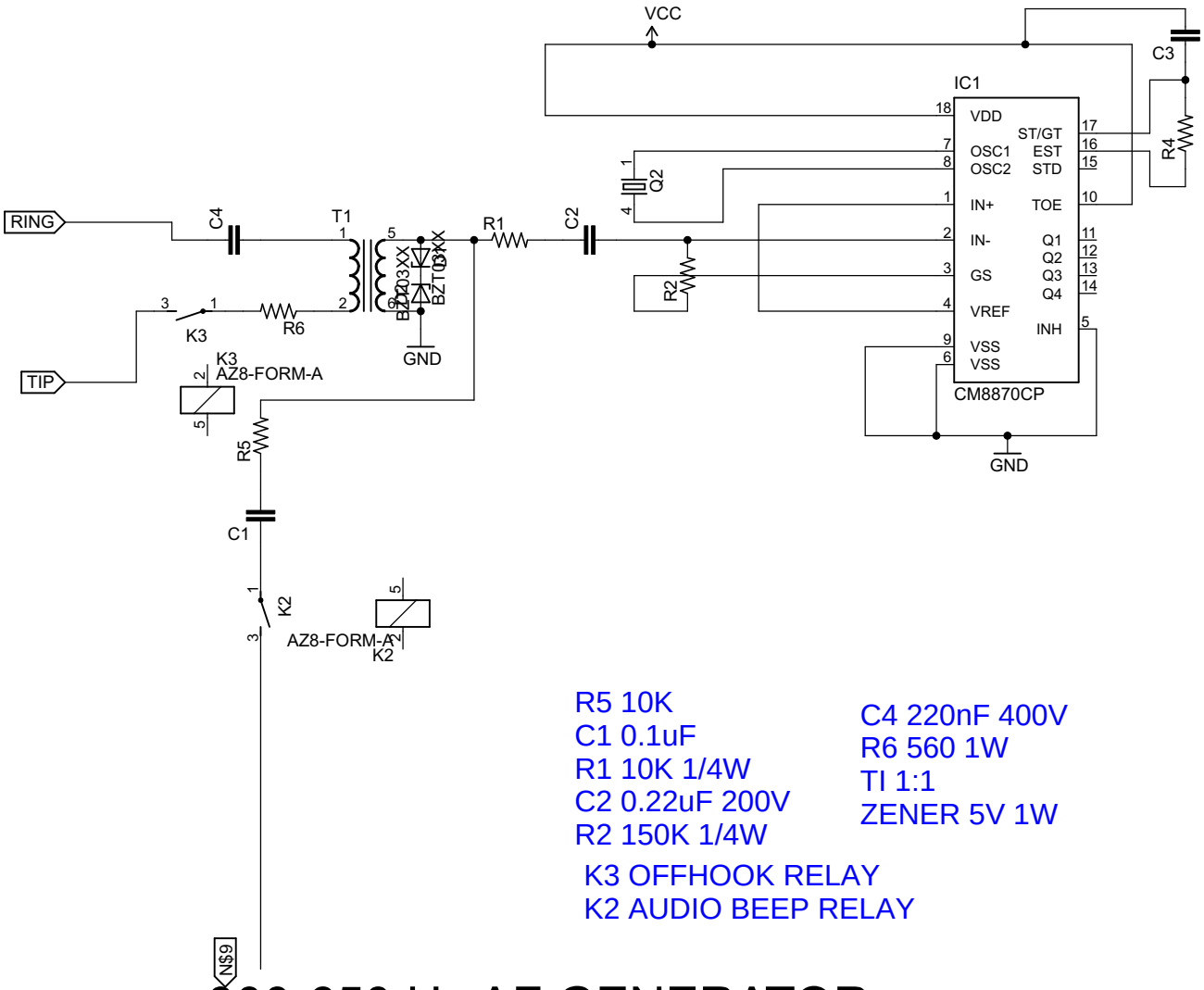

R5 10K
C1 0.1uF
R1 10K 1/4W
C2 0.22uF 200V
R2 150K 1/4W

C4 220nF 400V
R6 560 1W
TI 1:1
ZENER 5V 1W

K3 OFFHOOK RELAY
K2 AUDIO BEEP RELAY

300-650 Hz AF GENERATOR

Date: 2/23/2010 11:14:17 PM	
TITLE: fedback	Sheet: 1/1