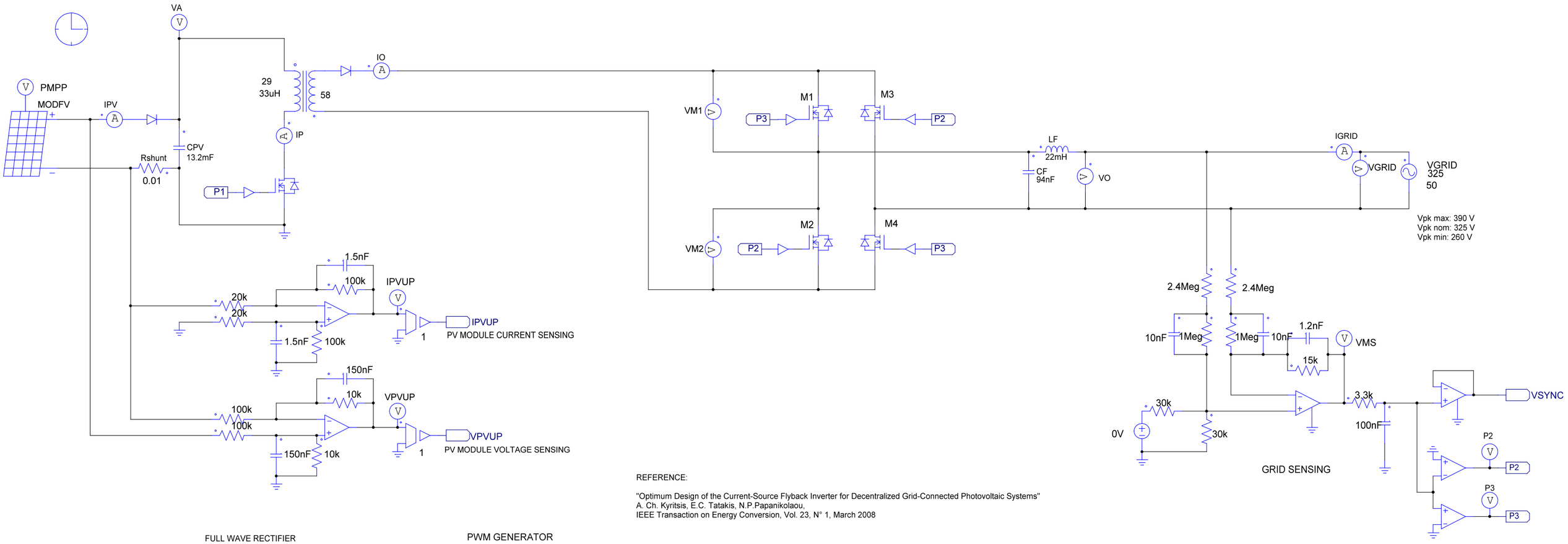

REFERENCE:

"Optimum Design of the Current-Source Flyback Inverter for Decentralized Grid-Connected Photovoltaic Systems"
A. Ch. Kyritsis, E.C. Tatakis, N.P.Papanikolaou,
IEEE Transaction on Energy Conversion, Vol. 23, N° 1, March 2008

POWERMOS		
Title	FLYBACK GRID TIE INVERTER	
Designed by	POWERMOS	
13/10/2011	Revision 1.0	Page 1 of 1