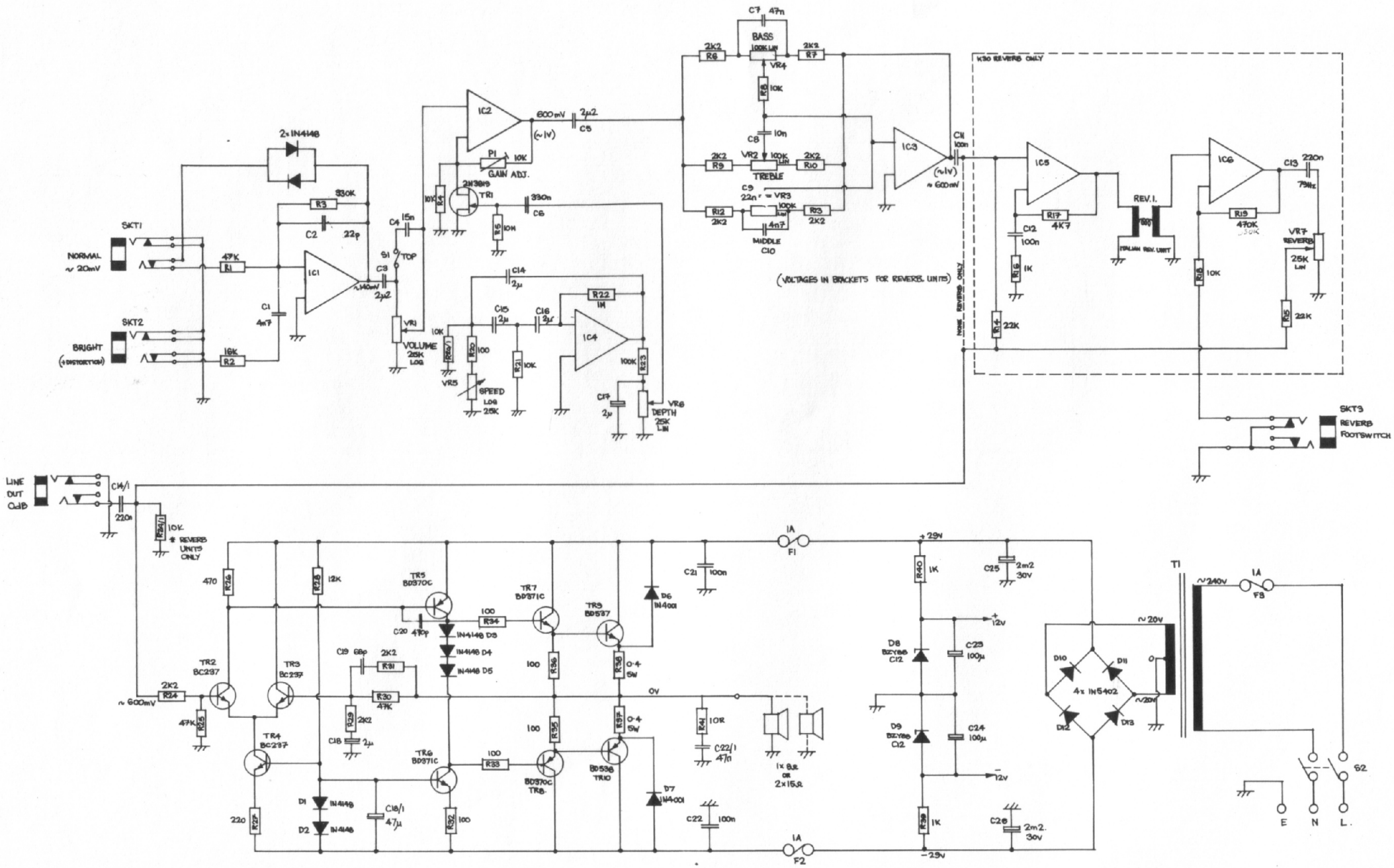

SKT1
NORMAL
~ 20mV
SKT2
BRIGHT
(+DISTORTION)
2×1N4148
IC1
IC2
IC3
IC4
IC5
IC6
GAIN ADJ.
VOLUME
25K
LOG
SPEED
LOG
25K
DEPTH
25K
LIN
BASS
TREBLE
MIDDLE
C10
(VOLTAGES IN BRACKETS FOR REVERB. UNITS)
K30 REVERB ONLY
REV. I.
ITALIAN REV. UNIT
VR7
REVERB
25K
LIN
SKT3
REVERB
FOOTSWITCH
LINE
OUT
0dB
* REVERB
UNITS
ONLY
TR2
BC237
TR3
BC237
TR4
BC237
TR5
BD370C
TR6
BD371C
TR7
BD371C
TR8
BD370C
TR9
BD537
TR10
BD538
1x 8Ω
OR
2x15Ω
+29V
-29V
+12V
-12V
4x 1N5402
T1
~240V
~20V
E
N
L.
S2

K 35/30 8:6:79