KIA494AP/AF

BIPOLAR LINEAR INTEGRATED CIRCUIT

Voltage-Mode PWM Controller IC

The KIA494AP/AF incorporates on a single monolithic chip all the functions required in the construction of a pulse-width-modulation control circuit. Designed primarily for power supply control, this device offers the systems engineer the flexibility to tailor the power supply control circuitry to a specific application.

The KIA494AP/AF contains two error amplifiers, an on-chip adjustable oscillator, a dead-tme control(DTC) comparator, a pulse-steering control flip-flop, a 5-V, 5%-precision requlator, and output-control circuits.

The error amplifiers exhibit a common-mode voltage range from -0.3V to V_{CC} -2V. The dead-time control comparator has a fixed offset that provides approximately 5% dead time. The on-chip oscillator may be bypassed by terminating RT to the reference output and providing a sawtooth input to CT, or it may drive the common circuits in synchronous multiple-rail power supplies.

The uncommitted output transistors provide either common-emitter or emitter-follower output capability. The KIA494AP/AF provides for push-pull or single-ended output operation, which may be selected through the output-control function.

The architecture of this device prohibits the possibility of either output being pulsed twice during push-pull operation.

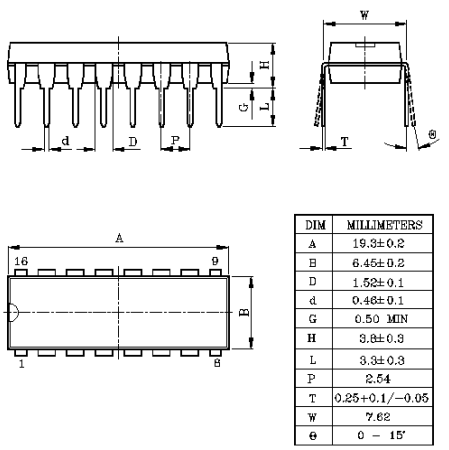

DIM	MILLIMETERS
A	19.3±0.2
B	6.45±0.2
D	1.52±0.1
d	0.46±0.1
G	0.50 MIN
H	3.8±0.3
L	3.3±0.3
P	2.54
T	0.25+0.1/−0.05
W	7.62
θ	0 ~ 15°

DIP-16

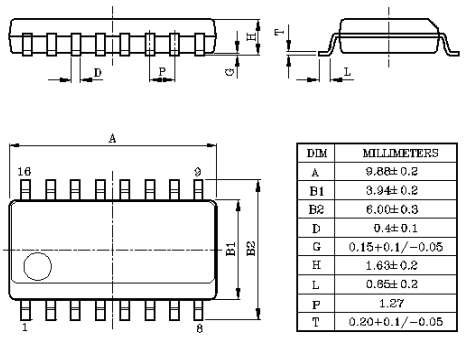

DIM	MILLIMETERS
A	9.88±0.2
B1	3.94±0.2
B2	6.00±0.3
D	0.4±0.1
G	0.15+0.1/−0.05
H	1.63±0.2
L	0.85±0.2
P	1.27
T	0.20+0.1/−0.05

FLP-16

FEATURES

- Completed PWM Power Control Circuitry.
- Uncommitted Outputs for 200mA Sink or Source Current.
- Output Control Selects Single-Ended or Push-Pull Operation.
- Internal Circuitry Prohibits Double Pulse at Either Output.
- Variable Dead Time Provides Control Over Total Range.
- Internal Regulator Provides a Stable 5V Reference Supply With 5% Tolerance.
- Circuit Architecture Allows Easy Synchronization.

MAXIMUM RATINGS (Ta=25℃)

ITEM		SYMBOL	RATING	UNIT
Supply Voltage		V_{CC}	41	V
Error Amplifier Input Voltage		V_{IN}	V_{CC}+0.3	V
Collector Output Voltage		V_O	41	V
Collector Output Current		I_O	250	mA
Power Consumption	KIA494AP	P_D	750	mW
	KIA494AF		400	
Operating Temperature		T_{opr}	-40~85	℃
Storage Temperature		T_{stg}	-65~150	℃

FUNCTION TABLE

INPUT TO OUTPUT CTRL	OUTPUT FUNCTION
V_I=GND	Single-ended or paralled output
V_I=V_{ref}	Normal push-pull operation

RECOMMENDED OPERATING CONDITIONS

ITEM	SYMBOL	MIN.	TYP.	MAX.	UNIT
Supply Voltage	V_{CC}	7	-	40	V
Ampified Input Voltage	V_{IN}	-0.3	-	V_{CC}-2.0	V
Collector Output Voltage	V_O	-	-	40	V
Output Current (per one stage of output unit)	I_O	-	-	200	mA
Current Into Feedback Terminal	I_{fb}	-	-	0.3	mA
Timing Capacitor	C_T	0.47	-	10,000	nF
Timing Resister	R_T	1.8	-	500	kΩ
Oscillation Frequency	f_{osc}	1	-	300	kHz
Operating Temperature	T_{opr}	-40	-	85	℃

ELECTRICAL CHARACTERISTICS
REFERENCE VOLTAGE UNIT

CHARACTERISTIC	SYMBOL	TEST CONDITION	MIN.	TYP.	MAX.	UNIT
Output Voltage	V_{ref}	I_{ref}=1mA, Ta=25℃	4.75	5.00	5.25	V
Input Stability	R_{eg} IN	7V≦V_{CC}≦40V, I_{ref}=1mA, Ta=25℃	-	2	25	mV
Load Stability	R_{eg} L	1mA≦I_{ref}≦10mA, Ta=25℃	-	1	15	
Output Voltage Temp. Change	T_C V_{ref}	-40℃≦Ta≦85℃, I_{ref}=1mA	-	0.01	0.03	%/℃
Output Short-Circuit Current	I_S	V_{ref}=0	-	35	-	mA

OSCILLATION UNIT

CHARACTERISTIC	SYMBOL	TEST CONDITION	MIN.	TYP.	MAX.	UNIT
Oscillation Frequency Set Value	f_{OSC}	C_T=0.001μF, R_T=30kΩ	-	40	-	kHz
Oscillation Frequency Setting Accuracy	f_{DIV}	C_T=0.001μF, R_T=30kΩ	-	3.0	-	%
Frequency Input Stability	f_{VIN}	7V≦V_{CC}≦40V, Ta=25℃	-	0.1	-	
Frequency Temp. Change	f_{Ta}	-45℃≦Ta≦85℃	-	1	2	

PAUSE PERIOD ADJUSTING UNIT

CHARACTERISTIC	SYMBOL	TEST CONDITION	MIN.	TYP.	MAX.	UNIT
Input Bias Current	I_{IND}	0≦V_{IN}≦5.25V PIN 4	-	-2	-10	μA
Max. Duty (Each Output Stage)	Dy MAX.	V_{IN}=0, C_T=0.1μF, R_T=12kΩ	45	-	-	%
Input Threshold Voltage 1	V_{TH-1}	Output pulse 0% duty	-	2.8	3.3	V
Input Threshold Voltage 2	V_{TH-2}	Output pulse max. duty	0	-	-	

ERROR AMPLIFIER Ⅰ, Ⅱ

CHARACTERISTIC	SYMBOL	TEST CONDITION	MIN.	TYP.	MAX.	UNIT
Input Offset Voltage	V_{IO}	V_O PIN 3=2.5V	-	2	10	mV
Input Offset Current	I_{IO}	V_O PIN 3=2.5V	-	5.0	250	nA
Input Bias Current	I_{IB}	V_O PIN 3=2.5V	-	0.1	1	μA
In-phase Input Voltage Range	CMR_{IN}	$7V \leq V_{CC} \leq 40V$	0.3	-	$V_{CC}-2$	V
Open Load Gain	G_V	V_O PIN 3=0.5~3.5V, R_L=2kΩ	70	95	-	dB
Unity Gain Frequency	f_O	V_O PIN 3=0.5~3.5V, R_L=2kΩ	-	350	-	kHz
Common-mode rejection Ratio	CMRR	V_{CC}=40V	65	90	-	dB
Output Sink Current (Feedback)	I_{O+}	V_O PIN 3=0.7V	0.3	0.7	-	mA
Output Source Current (Feedback)	I_{O+}	V_O PIN 3=3.5V	-2	-10	-	

PWM COMPARATOR

CHARACTERISTIC	SYMBOL	TEST CONDITION	MIN.	TYP.	MAX.	UNIT
Input Threshold Voltage (Feedback)	V_{TH}	Zero duty cycle	-	4	4.5	V
Input Sink Current (Feedback)	I_I	V_O PIN 3=0.7V	0.3	0.7	-	mA

OUTPUT UNIT

CHARACTERISTIC		SYMBOL	TEST CONDITION	MIN.	TYP.	MAX.	UNIT
Collector off-state Current		$I_{C(off)}$	V_{CE}=40V, V_{CC}=40V Emitter grounded	-	-	100	μA
Emitter off-state Current		$I_{E(OFF)}$	$V_{CC}=V_C$=40V, V_E=0V Emitter follower	-	-	-100	
Emitter Saturation Voltage (Emitter grounded)		$V_{SAT(C)}$	I_C=200mA, V_E=0V	-	1.1	1.3	V
Collector Saturation Voltage (Emitter follower)		$V_{SAT(E)}$	I_E=-200mA, V_C=15V	-	1.5	2.5	
Output Voltage Rise Time (Emitter grounded)		t_{r1}		-	100	200	nS
Output Voltage Fall Time (Emitter follower)		t_{f1}		-	25	100	
Output Voltage Rise Time (Emitter follower)		t_{r2}		-	100	200	
Output Voltage Fall Time (Emitter grounded)		t_{f2}		-	40	100	
Output Control Input Operating Current	"L" State	I_{OCL}	$V_{OC} \leq 0.4V$	-	10	-	μA
	"H" State	I_{OCH}	$V_{OC}=V_{ref}$	-	0.2	3.5	mA

CURRENT CONSUMPTION (TOTAL)

CHARACTERISTIC	SYMBOL	TEST CONDITION	MIN.	TYP.	MAX.	UNIT
Standby Current	$I_{CC(S\cdot B)}$	V_{CC}=15V, Other terminal opened	-	6	10	mA
Average Supply Current	I_{CC} total	$V_{(PIN4)}$=2V, C_T=0.01μF R_T=12kΩ, V_{CC}=15V	-	7.5	-	

BLOCK DIAGRAM

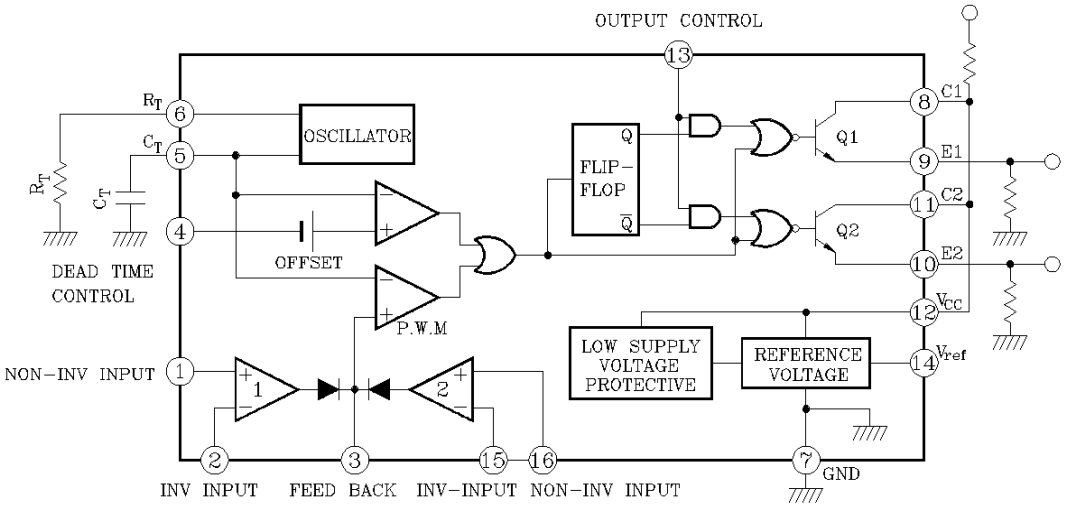

(Note) PIN (13) BECOMES SINGLE MODE AT "L" AND PUSH-PULL MODE AT "H"

OPERATING WAVEFORM

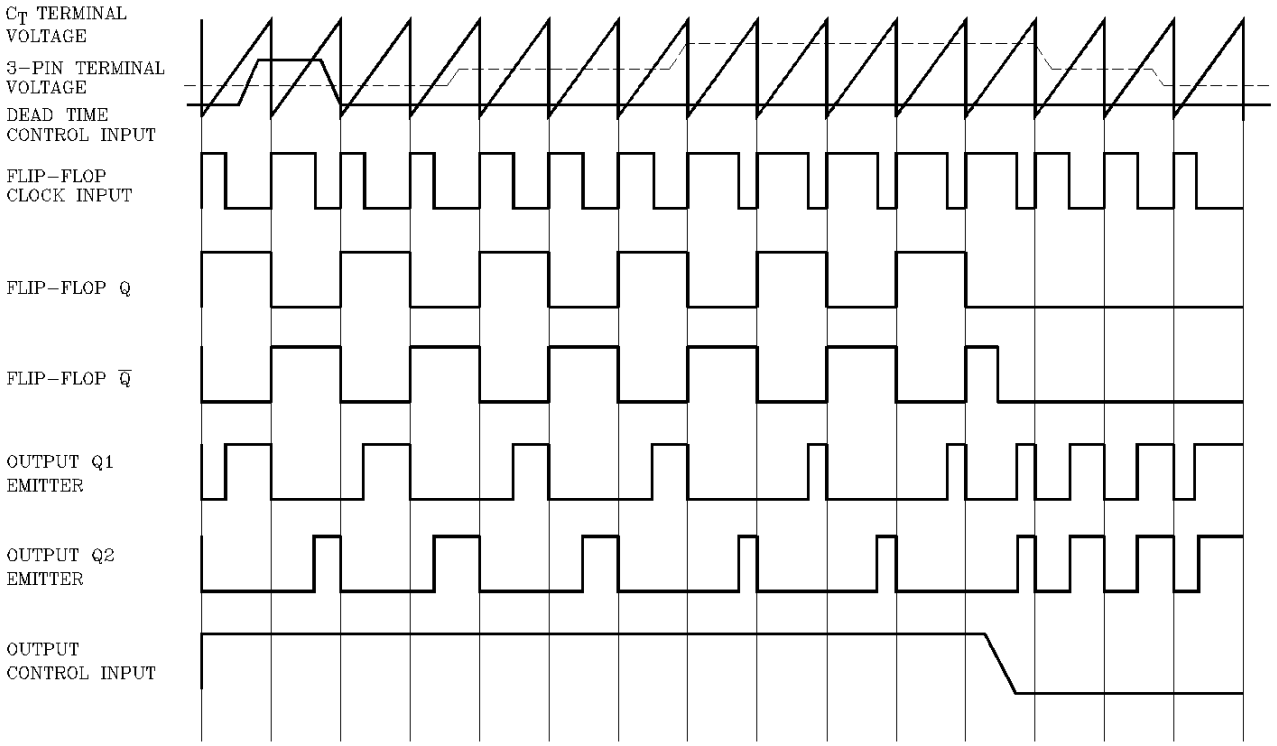

TEST CIRCUIT

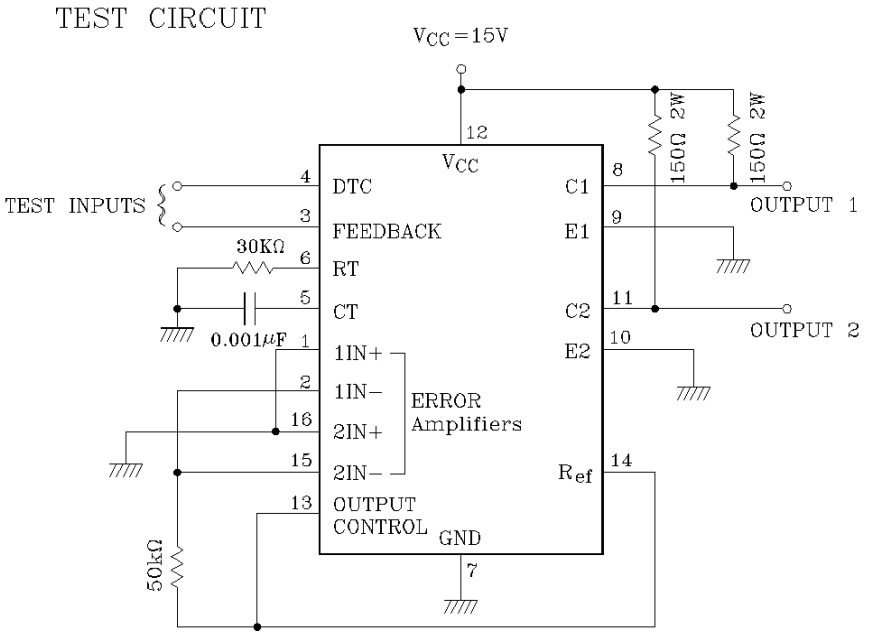

Error Amplifier Characteristics

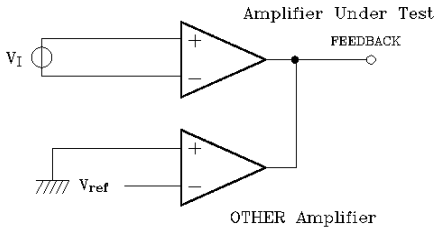

Common-Emitter Configuration Test Circuit and Waveform

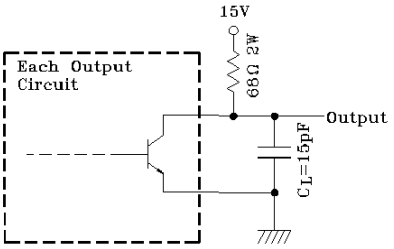

TEST CIRCUIT

NOTE A. C_L includes probe and jig capacitance.

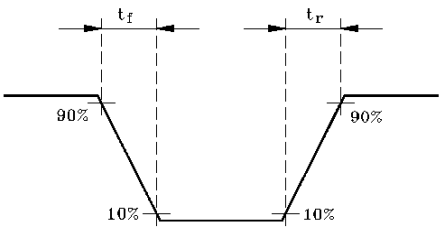

OUTPUT VOLTAGE WAVEFORM

Emitter-Follower Configuration Test Circuit and Waveform

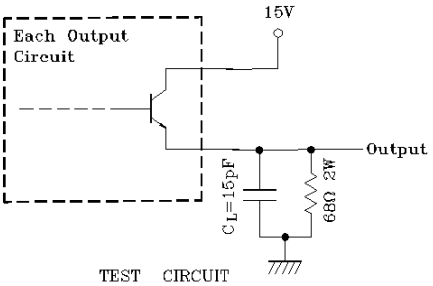

TEST CIRCUIT

NOTE A. C_L includes probe and jig capacitance.

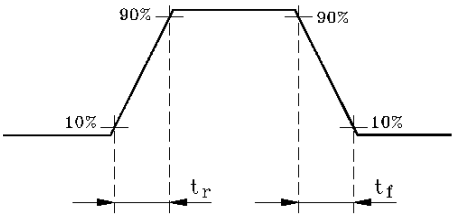

OUTPUT VOLTAGE WAVEFORM

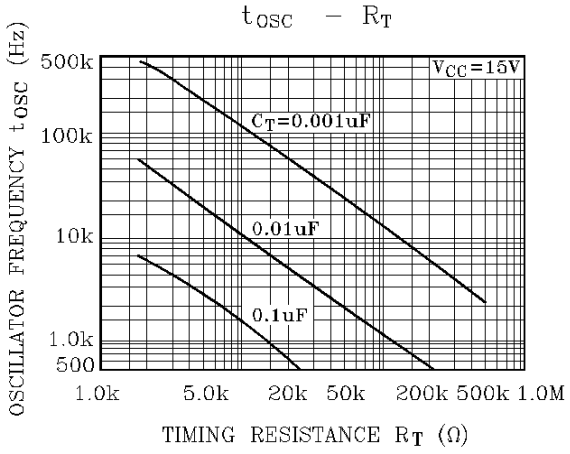
tOSC – RT
OSCILLATOR FREQUENCY tOSC (Hz)
500k
100k
10k
1.0k
500
VCC=15V
CT=0.001uF
0.01uF
0.1uF
1.0k
5.0k
20k
50k
200k
500k
1.0M
TIMING RESISTANCE RT (Ω)

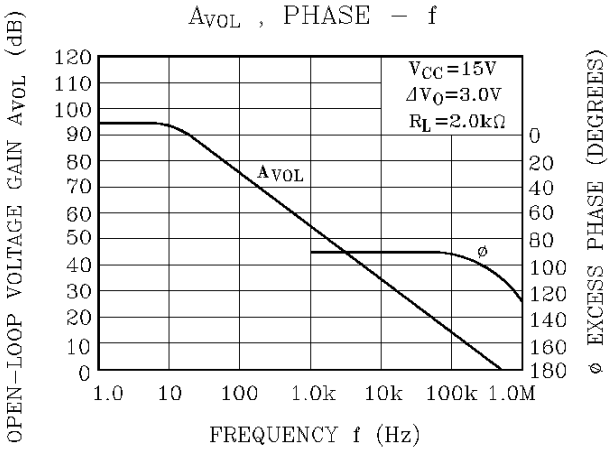
AVOL , PHASE – f
OPEN-LOOP VOLTAGE GAIN AVOL (dB)
120
110
100
90
80
70
60
50
40
30
20
10
0
VCC=15V
ΔVO=3.0V
RL=2.0kΩ
AVOL
ø
0
20
40
60
80
100
120
140
160
180
ø EXCESS PHASE (DEGREES)
1.0
10
100
1.0k
10k
100k
1.0M
FREQUENCY f (Hz)

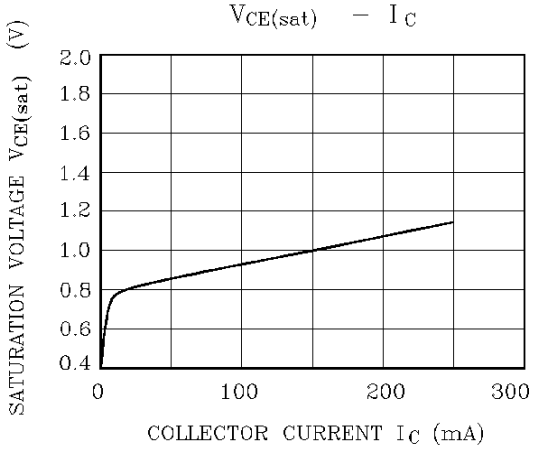
VCE(sat) – IC
SATURATION VOLTAGE VCE(sat) (V)
2.0
1.8
1.6
1.4
1.2
1.0
0.8
0.6
0.4
0
100
200
300
COLLECTOR CURRENT IC (mA)

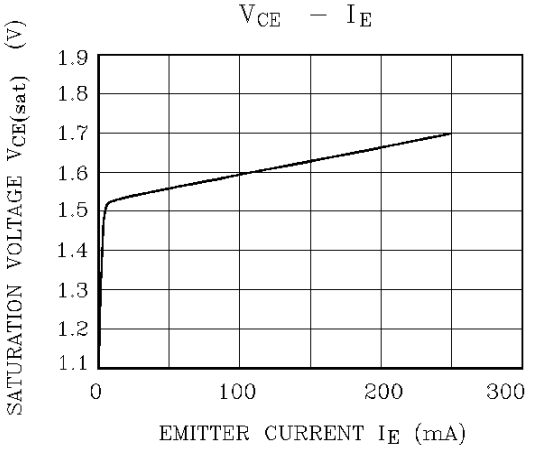
VCE – IE
SATURATION VOLTAGE VCE(sat) (V)
1.9
1.8
1.7
1.6
1.5
1.4
1.3
1.2
1.1
0
100
200
300
EMITTER CURRENT IE (mA)

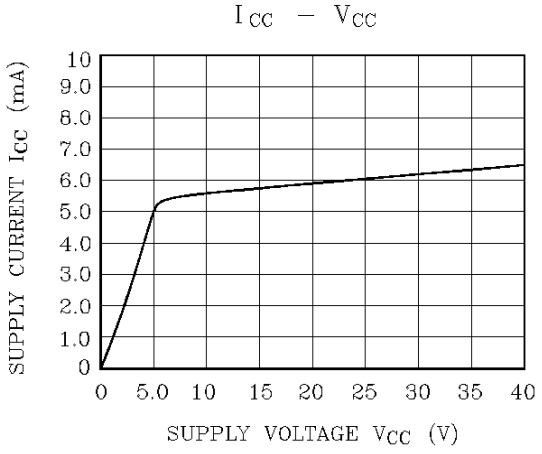
ICC – VCC
SUPPLY CURRENT ICC (mA)
10
9.0
8.0
7.0
6.0
5.0
4.0
3.0
2.0
1.0
0
0
5.0
10
15
20
25
30
35
40
SUPPLY VOLTAGE VCC (V)

WWW.ALLDATASHEET.COM

Copyright © Each Manufacturing Company.

All Datasheets cannot be modified without permission.

This datasheet has been download from :

www.AllDataSheet.com

100% Free DataSheet Search Site.

Free Download.

No Register.

Fast Search System.

www.AllDataSheet.com