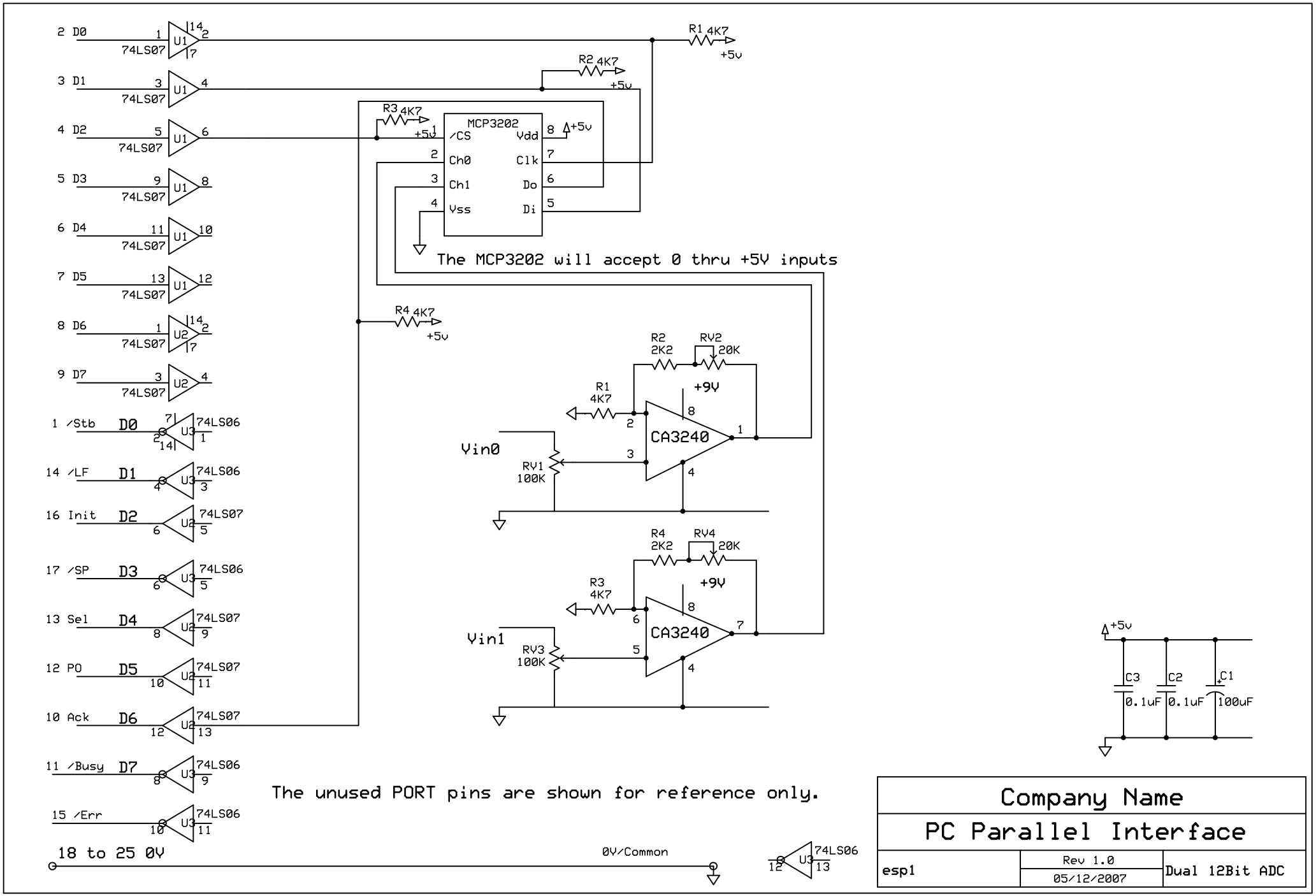
2 D0
3 D1
4 D2
5 D3
6 D4
7 D5
8 D6
9 D7
74LS07
U1
U2
R1 4K7
R2 4K7
R3 4K7
R4 4K7
+5v
MCP3202
/CS
Ch0
Ch1
Vss
Vdd
Clk
Do
Di
The MCP3202 will accept 0 thru +5V inputs
R2 2K2
RV2 20K
R1 4K7
+9V
CA3240
Vin0
RV1 100K
R4 2K2
RV4 20K
R3 4K7
Vin1
RV3 100K
1 /Stb
14 /LF
16 Init
17 /SP
13 Sel
12 PO
10 Ack
11 /Busy
15 /Err
D0
D1
D2
D3
D4
D5
D6
D7
74LS06
U3
C3 0.1uF
C2 0.1uF
C1 100uF
The unused PORT pins are shown for reference only.
18 to 25 0V
0V/Common
Company Name
PC Parallel Interface
esp1
Rev 1.0
05/12/2007
Dual 12Bit ADC