Precision Timer

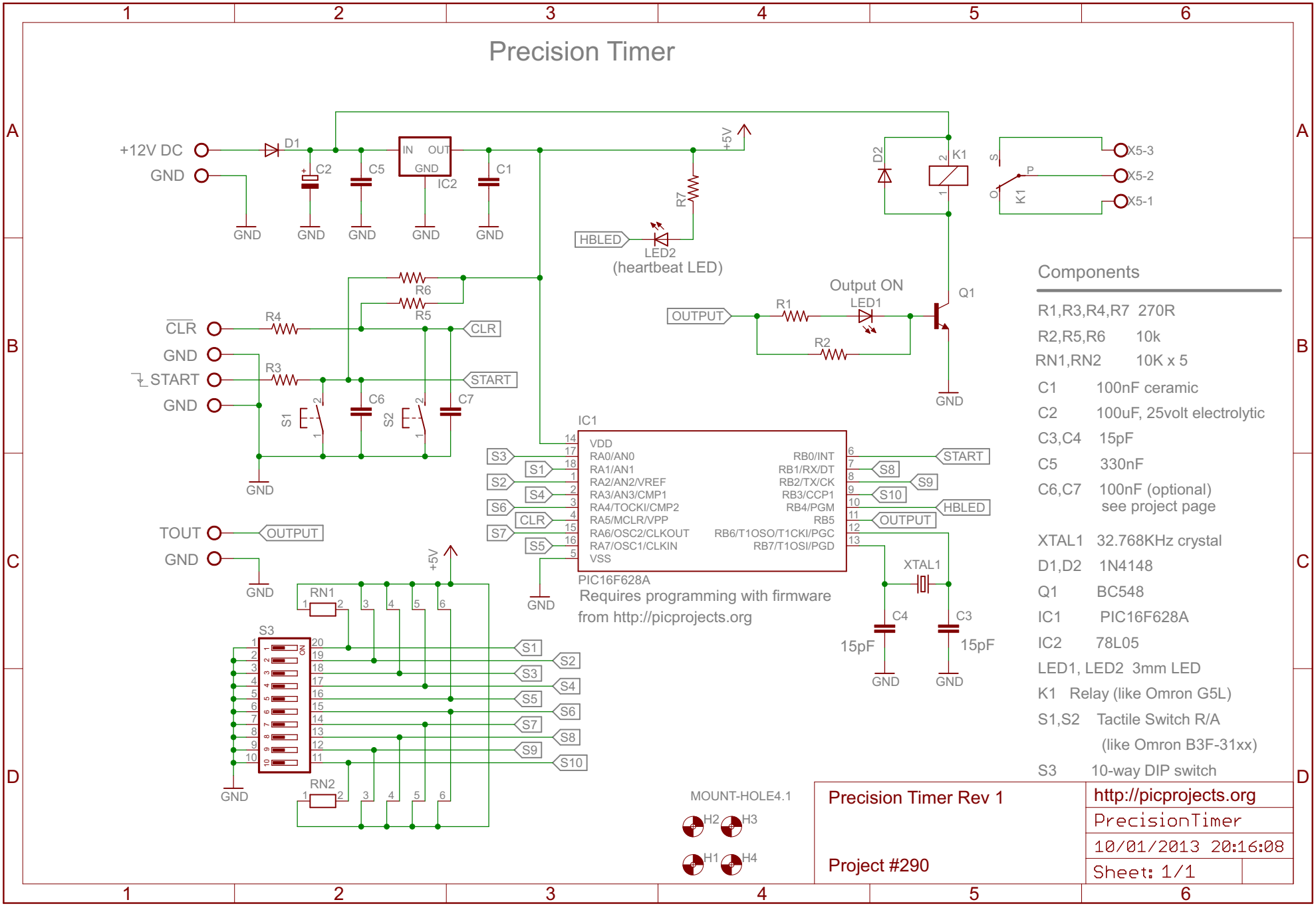

Components

R1,R3,R4,R7	270R
R2,R5,R6	10k
RN1,RN2	10K x 5
C1	100nF ceramic
C2	100uF, 25volt electrolytic
C3,C4	15pF
C5	330nF
C6,C7	100nF (optional) see project page
XTAL1	32.768KHz crystal
D1,D2	1N4148
Q1	BC548
IC1	PIC16F628A
IC2	78L05
LED1, LED2	3mm LED
K1	Relay (like Omron G5L)
S1,S2	Tactile Switch R/A (like Omron B3F-31xx)
S3	10-way DIP switch

Precision Timer Rev 1

Project #290

http://picprojects.org

PrecisionTimer

10/01/2013 20:16:08

Sheet: 1/1