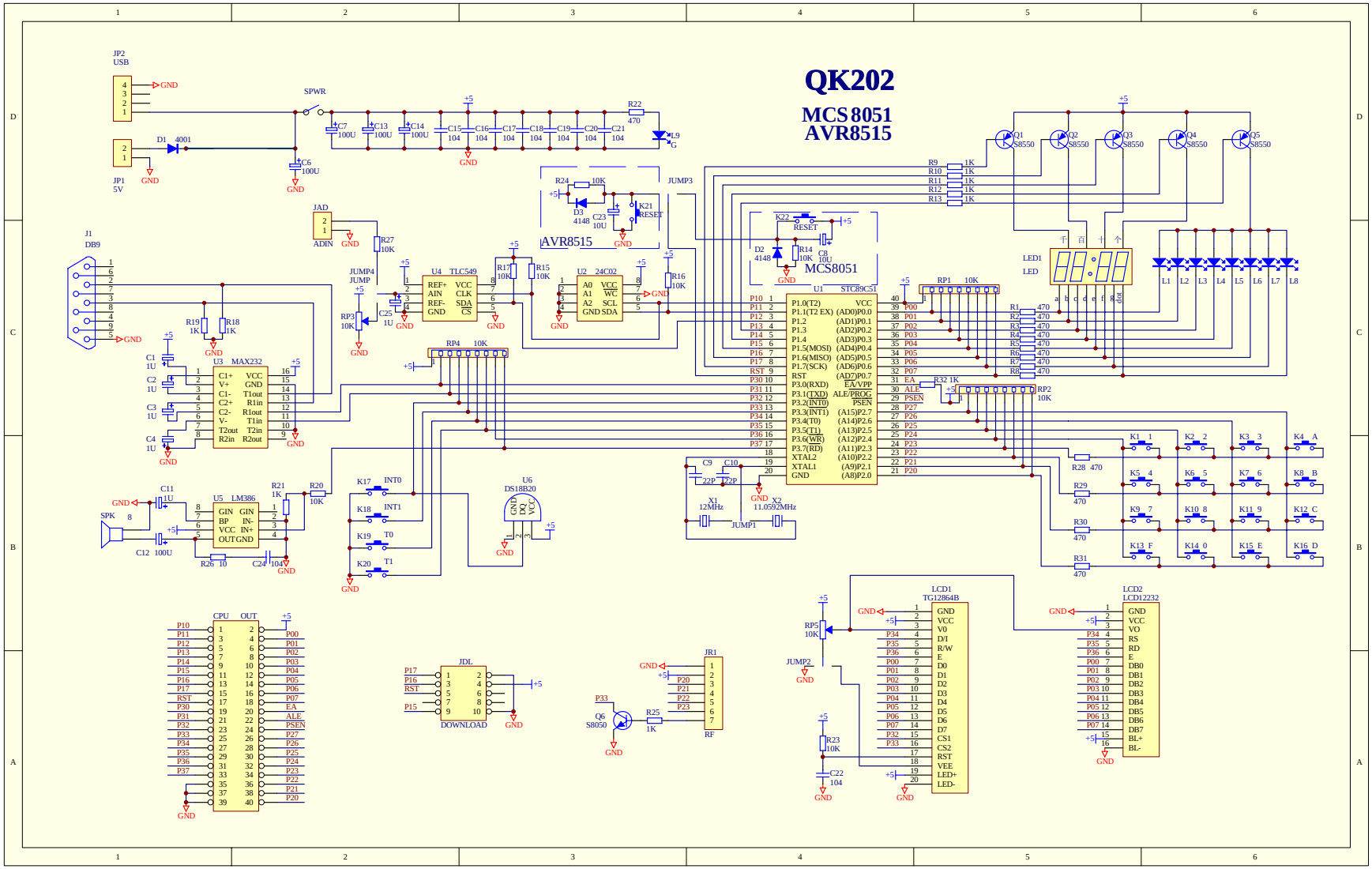
QK202
MCS8051
AVR8515
JP2
USB
JP1
5V
SPWR
D1 4001
C6 100U
C7 100U
C13 100U
C14 100U
C15 104
C16 104
C17 104
C18 104
C19 104
C20 104
C21 104
R22 470
L9
G
JUMP3
R24 10K
D3 4148
C23 10U
K21 RESET
AVR8515
JAD
ADIN
R27 10K
J1
DB9
JUMP4
JUMP
RP3 10K
C25 1U
U4 TLC549
REF+ VCC
AIN CLK
REF- SDA
GND CS
R17 10K
R15 10K
U2 24C02
A0 VCC
A1 WC
A2 SCL
GND SDA
R16 10K
R19 1K
R18 1K
C1 1U
C2 1U
C3 1U
C4 1U
U3 MAX232
C1+ VCC
V+ GND
C1- T1out
C2+ R1in
C2- R1out
V- T1in
T2out T2in
R2in R2out
RP4 10K
U5 LM386
GIN GIN
BP IN-
VCC IN+
OUT GND
R21 1K
R20 10K
C11 1U
SPK
C12 100U
R26 10
C24 104
K17 INT0
K18 INT1
K19 T0
K20 T1
U6
DS18B20
GND DQ VCC
C9 22P
C10 22P
X1 12MHz
X2 11.0592MHz
JUMP1
U1 STC89C51
P1.0(T2) VCC
P1.1(T2 EX) (AD0)P0.0
P1.2 (AD1)P0.1
P1.3 (AD2)P0.2
P1.4 (AD3)P0.3
P1.5(MOSI) (AD4)P0.4
P1.6(MISO) (AD5)P0.5
P1.7(SCK) (AD6)P0.6
RST (AD7)P0.7
P3.0(RXD) EA/VPP
P3.1(TXD) ALE/PROG
P3.2(INT0) PSEN
P3.3(INT1) (A15)P2.7
P3.4(T0) (A14)P2.6
P3.5(T1) (A13)P2.5
P3.6(WR) (A12)P2.4
P3.7(RD) (A11)P2.3
XTAL2 (A10)P2.2
XTAL1 (A9)P2.1
GND (A8)P2.0
K22 RESET
D2 4148
R14 10K
C8 10U
MCS8051
RP1 10K
R32 1K
RP2 10K
Q1 S8550
Q2 S8550
Q3 S8550
Q4 S8550
Q5 S8550
R9 1K
R10 1K
R11 1K
R12 1K
R13 1K
LED1
LED
L1 L2 L3 L4 L5 L6 L7 L8
R1 470
R2 470
R3 470
R4 470
R5 470
R6 470
R7 470
R8 470
R28 470
R29 470
R30 470
R31 470
K1 1
K2 2
K3 3
K4 A
K5 4
K6 5
K7 6
K8 B
K9 7
K10 8
K11 9
K12 C
K13 F
K14 0
K15 E
K16 D
CPU OUT
P10 P11 P12 P13 P14 P15 P16 P17 RST P30 P31 P32 P33 P34 P35 P36 P37
P00 P01 P02 P03 P04 P05 P06 P07 EA ALE PSEN P27 P26 P25 P24 P23 P22 P21 P20
JDL
DOWNLOAD
P17 P16 RST P15
JR1
RF
P20 P21 P22 P23
P33
Q6 S8050
R25 1K
RP5 10K
JUMP2
R23 10K
C22 104
LCD1
TG12864B
GND VCC V0 D/I R/W E D0 D1 D2 D3 D4 D5 D6 D7 CS1 CS2 RST VEE LED+ LED-
LCD2
LCD12232
GND VCC VO RS RD E DB0 DB1 DB2 DB3 DB4 DB5 DB6 DB7 BL+ BL-
GND
+5