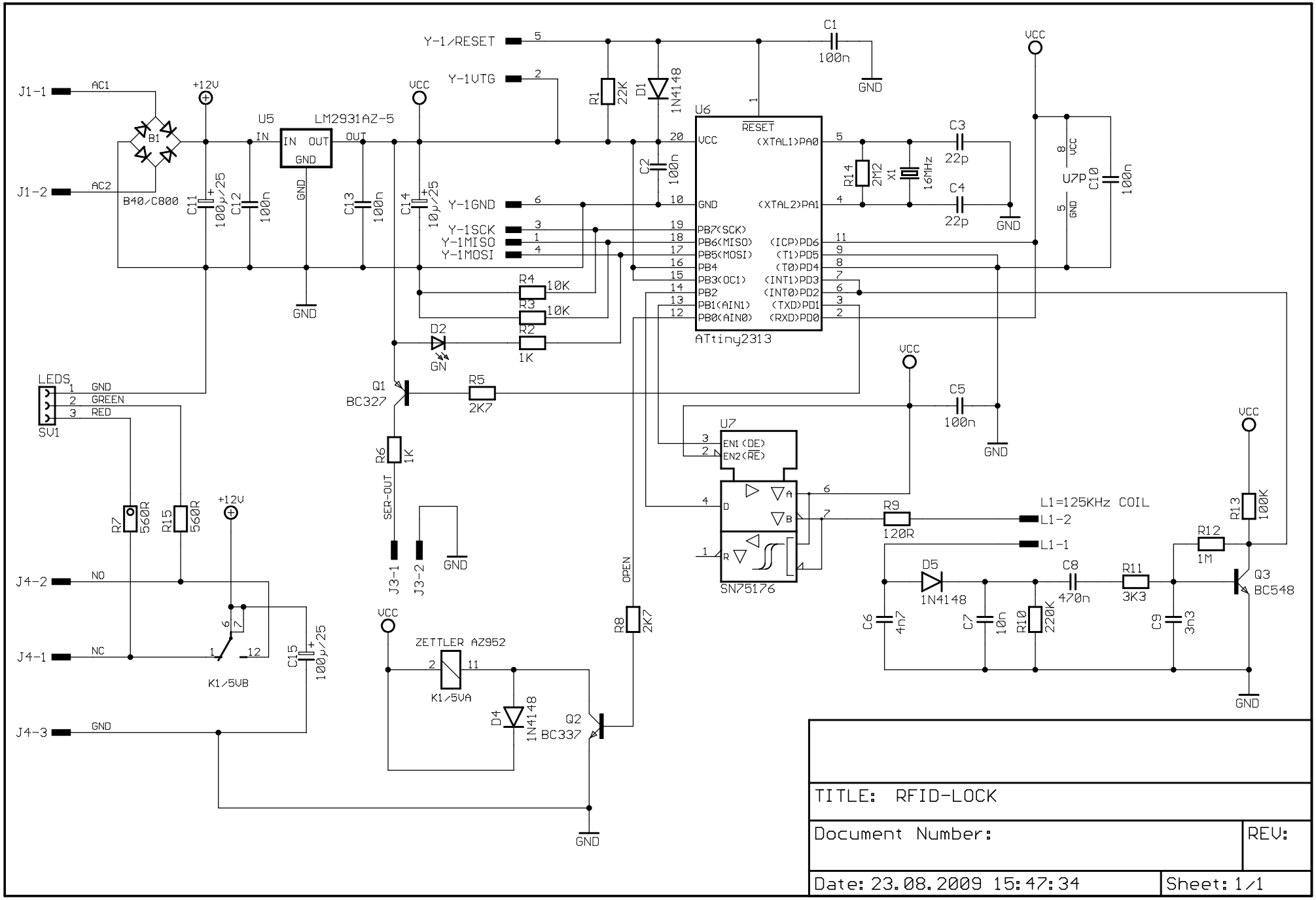
J1-1
AC1
J1-2
AC2
B1
B40/C800
+12V
C11
100µ/25
C12
100n
U5
LM2931AZ-5
IN
OUT
GND
C13
100n
C14
10µ/25
VCC
Y-1/RESET
Y-1VTG
Y-1GND
Y-1SCK
Y-1MISO
Y-1MOSI
R1
22K
D1
1N4148
C2
100n
C1
100n
U6
RESET
VCC
GND
(XTAL1)PA0
(XTAL2)PA1
PB7(SCK)
PB6(MISO)
PB5(MOSI)
PB4
PB3(OC1)
PB2
PB1(AIN1)
PB0(AIN0)
(ICP)PD6
(T1)PD5
(T0)PD4
(INT1)PD3
(INT0)PD2
(TXD)PD1
(RXD)PD0
ATtiny2313
R14
2M2
X1
16MHz
C3
22p
C4
22p
U7P
C10
100n
R4
10K
R3
10K
R2
1K
D2
GN
Q1
BC327
R5
2K7
R6
1K
SER-OUT
J3-1
J3-2
LEDS
SV1
GREEN
RED
R7
560R
R15
560R
J4-2
NO
J4-1
NC
J4-3
K1/5VB
C15
100µ/25
ZETTLER AZ952
K1/5VA
D4
1N4148
Q2
BC337
OPEN
R8
2K7
U7
EN1(DE)
EN2(RE)
SN75176
C5
100n
R9
120R
L1=125KHz COIL
L1-2
L1-1
D5
1N4148
C6
4n7
C7
10n
R10
220K
C8
470n
R11
3K3
C9
3n3
R12
1M
R13
100K
Q3
BC548
TITLE: RFID-LOCK
Document Number:
REV:
Date: 23.08.2009 15:47:34
Sheet: 1/1