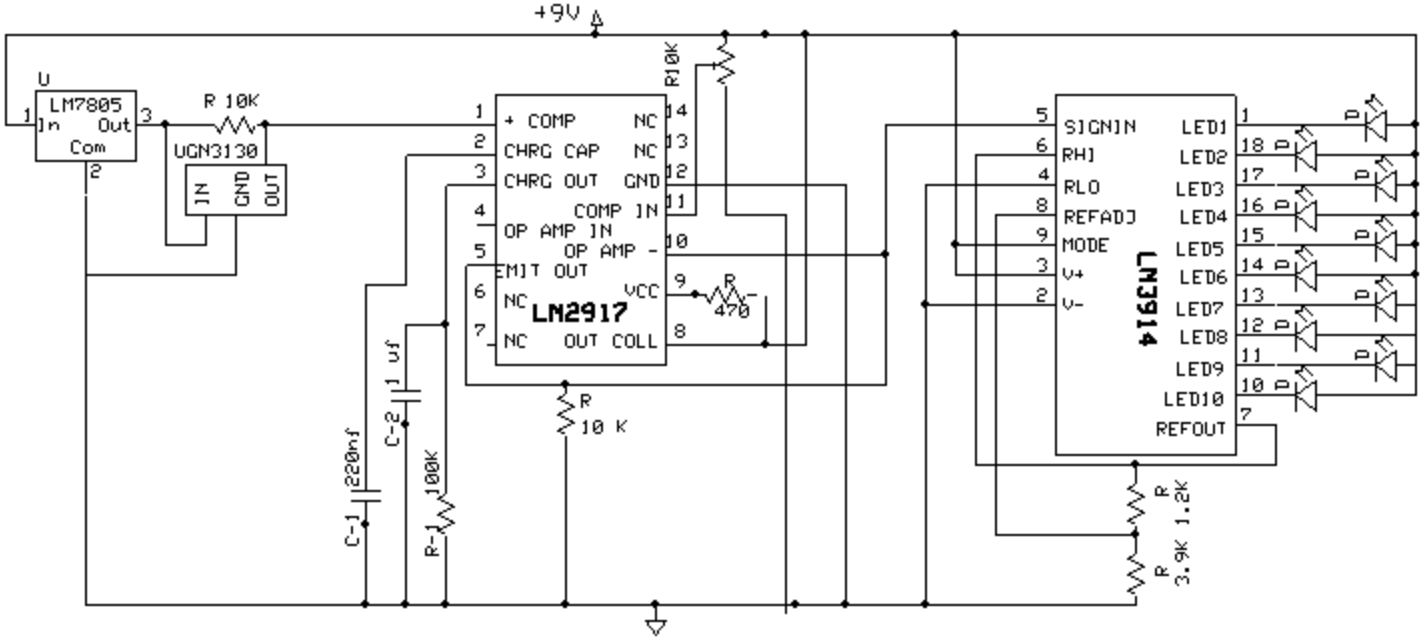

ANENOMETER CIRCUIT

MAX FREQUENCY INPUT IS 30HZ @ 4VDC +/- FROM HALL SENSOR
MAX VOLTAGE OUTPUT DESIRED FROM 2917 IS 5 VOLTS
0-5 VDC IS INPTUT FOR 3914

5VDC=30HZ*7.65VDC*100K* C1 IS THE EQUATION I USED TO SOLVE FOR C1 R1=100,000 C1=.00000022=220nf

I CAN GET THE 3914 TO WORK WITH 0-5 VDC INPUT ,BUT I CANNOT GET THE 2917 WORKING

ANY HELP WOULD BE GREATLY APPRECIATED

Company Name		
Schematic Name		
Designer's name	Rev 1.0 11/13/2009	Page # or name